Architecture of Distributed Systems 2011/2012

Quality Attributes

Johan Lukkien, Bojan Orlic

Goals

- Identify quality attributes (QA)
- Understand relation between QAs and architecture
- Learn how to express QAs in scenarios
- Learn how to achieve QAs

* Slides are based on Chapters 4 & 5 from the book
  "Software architectures in practice" - Len Bass, Paul Clements and Rick Kazman (available on-line, see the site)

Motivation

- Systems are developed for a certain purpose, to satisfy *functional requirements*
  - Remember lecture 1, the design problem

- Main problems with, and reasons to redesign software and systems:
  - *Difficult to maintain, port, scale*
  - *Too slow*
  - *Lack of dependability: maintainability, reliability, availability, security, safety*
  - *New features needed*

- Besides functional requirements, a good understanding of quality requirements of the system is essential
  - 'quality use cases' to describe quality requirements
  - leads to a 'design for ....' approach
    - design for test, design for maintenance, design for security, design for extensibility

QAs in development process

Types of qualities:

- Qualities of the developed system (QAs, system qualities – our focus)
  - e.g. availability, modifiability, performance, security, testability, usability, ...
- Qualities of the architecture itself
  - e.g. conceptual integrity, consistence, relative completeness, buildability
- Qualities of development process
  - coding, testing, documentation & integration procedures, code reviews..
- Business qualities (mapped to system qualities)
  - e.g. time to market, cost/benefit

Ariane 5, flight 501

- June 4, 1996, 39 seconds after lift-off from Kourou, French Guiana
- 10y development, $10 billion
- Cargo+rocket: $0.5 billion

- Failure report made up by inquiry board chaired by prof. J.L. Lions

From inquiry report ...

- The launcher started to disintegrate at about H0 + 39 seconds because of high aerodynamic loads due to an angle of attack of more than 20 degrees that led to separation of the boosters from the main stage, in turn triggering the self-destruct system of the launcher.

- This angle of attack was caused by full nozzle deflections of the solid boosters and the Vulcain main engine.

- These nozzle deflections were commanded by the On-Board Computer (OBC) software on the basis of data transmitted by the active Inertial Reference System (SRI 2). Part of these data at that time did not contain proper flight data, but showed a diagnostic bit pattern of the computer of the SRI 2, which was interpreted as flight data.

Cnt'd

- The reason why the active SRI 2 did not send correct attitude data was that the unit had declared a failure due to a software exception.

- The OBC could not switch to the back-up SRI 1 because that unit had already ceased to function during the previous data cycle (72 milliseconds period) for the same reason as SRI 2.

- The internal SRI software exception was caused during execution of a data conversion from 64-bit floating point to 16-bit signed integer value. The floating point number which was converted had a value greater than what could be represented by a 16-bit signed integer. This resulted in an Operand Error. The data conversion instructions (in Ada code) were not protected from causing an Operand Error, although other conversions of comparable variables in the same place in the code were protected.

Cnt'd

- The error occurred in a part of the software that only performs alignment of the strap-down inertial platform. This software module computes meaningful results only before lift-off. As soon as the launcher lifts off, this function serves no purpose.

- The alignment function is operative for 50 seconds after starting of the Flight Mode of the SRIs which occurs at H0 - 3 seconds for Ariane 5. Consequently, when lift-off occurs, the function continues for approx. 40 seconds of flight. This time sequence is based on a requirement of Ariane 4 and is not required for Ariane 5.

- The Operand Error occurred due to an unexpected high value of an internal alignment function result called BH, Horizontal Bias, related to the horizontal velocity sensed by the platform. This value is calculated as an indicator for alignment precision over time.

- The value of BH was much higher than expected because the early part of the trajectory of Ariane 5 differs from that of Ariane 4 and results in considerably higher horizontal velocity values.

Recommendations by the inquiry board

- **R1** Switch off the alignment function of the inertial reference system immediately after lift-off. More generally, no software function should run during flight unless it is needed.

- **R2** Prepare a test facility including as much real equipment as technically feasible, inject realistic input data, and perform complete, closed-loop, system testing. Complete simulations must take place before any mission. A high test coverage has to be obtained.

- **R3** Do not allow any sensor, such as the inertial reference system, to stop sending best effort data.

- **R4** Organize, for each item of equipment incorporating software, a specific software qualification review. The Industrial Architect shall take part in these reviews and report on complete system testing performed with the equipment. All restrictions on use of the equipment shall be made explicit for the Review Board. Make all critical software a Configuration Controlled Item (CCI).

- **R5** Review all flight software (including embedded software), and in particular :
  - Identify all implicit assumptions made by the code and its justification documents on the values of quantities provided by the equipment. Check these assumptions against the restrictions on use of the equipment.
  - Verify the range of values taken by any internal or communication variables in the software.
  - Solutions to potential problems in the on-board computer software, paying particular attention to on-board computer switch over, shall be proposed by the project team and reviewed by a group of external experts, who shall report to the on-board computer Qualification Board.

- **R6** Wherever technically feasible, consider confining exceptions to tasks and devise backup capabilities.

- **R7** Provide more data to the telemetry upon failure of any component, so that recovering equipment will be less essential.

- **R8** Reconsider the definition of critical components, taking failures of software origin into account (particularly single point failures).

- **R9** Include external (to the project) participants when reviewing specifications, code and justification documents. Make sure that these reviews consider the substance of arguments, rather than check that verifications have been made.

- **R10** Include trajectory data in specifications and test requirements.

- **R11** Review the test coverage of existing equipment and extend it where it is deemed necessary.

- **R12** Give the justification documents the same attention as code. Improve the technique for keeping code and its justifications consistent.

- **R13** Set up a team that will prepare the procedure for qualifying software, propose stringent rules for confirming such qualification, and ascertain that specification, verification and testing of software are of a consistently high quality in the Ariane 5 programme. Including external RAMS experts is to be considered.

- **R14** A more transparent organisation of the cooperation among the partners in the Ariane 5 programme must be considered. Close engineering cooperation, with clear cut authority and responsibility, is needed to achieve system coherence, with simple and clear interfaces between partners.

Notes

- Components are dependent, and so is their reliability
  - The overall failure required a whole series of components to 'cooperate'
  - One component's failure is another ones fault (see later)
  - Note that the language (ADA) was specifically designed for such purposes and has the facilities to properly deal with the error

- Small errors, big effects
  - Small errors can have big impact (dependency cause/consequence is not linear)
  - Several simultaneous small errors can result in unexpected behavior

- Assumptions need to hold
  - Solutions for problems are based on assumptions
  - Assumptions are often not explicitly stated in documentation or simply disregarded when using a component

- Which recommendation would have caught the problem?

From our *design problem...* (lecture 1)

- 'Assumptions about the environment'
  - consider all behaviors of the inputs to a component: its external environment
    - typical loads, (mis)handling, attacks, ...
    - include those considered extreme, erroneous
  - for a component these can be *internal* (within the system) and *external*
  - the architecture needs a model of the environment of a component

- Each QA has its own model aspects, and artifacts to which the QA pertains
  - failure model (reliability, internal /external components), attack model (security, external/internal?), load or usage model (performance, internal /external), ...

- An architecture addresses QA's to the extent of the given models
  - in fact, the specification has been extended, by the QA's to be 'more total'
  - mind the 'Black Swan', disruptive dependence on unexpected behavior
    - N.N. Taleb, *The Black Swan – the impact of the highly improbable*, Random House, New York, 2007.

Examples

- Availability and reliability of storage
  - failure model (assumptions):
    - at most one disk fails
      - probability dependent on #transactions performed
      - which depends on the usage (external)
    - disk failure can be observed
  - solution:
    - replicate disk
  - what if the disk could produce faulty information?
    - use majority vote and three disks
    - examine RAID solutions

- Maintainability
  - a model of expected changes, and repair scenarios

Practical aspects of QAs

- Dependencies exist between QAs
  - Improving most QAs negatively influence performance (e.g. isolating dependencies to increase portability or introducing redundancy to improve reliability)
- Quality attributes must be dealt with in all phases of development:
  - The choices of an architect set the foundation for quality attributes
  - To achieve qualities proper implementation is needed
- Limited man power and time-to-market results in a trade-off
- Not all QAs are equally important in particular system
  - It is important to prioritize them,
  - E.g. in safety critical systems, reliability is key QA

QAs in development process

Types of qualities:

- Qualities of the developed system (QAs, system qualities – our focus)
  - e.g. availability, modifiability, performance, security, testability, usability, ...
- Qualities of the architecture itself
  - e.g. conceptual integrity, consistence, relative completeness, buildability
- Qualities of development process
  - coding, testing, documentation & integration procedures, code reviews..
- Business qualities (mapped to system qualities)
  - e.g. time to market, cost/benefit

Management of QAs:

- Requirements specifications (QA *scenarios*)
  - define what is desired response in particular situation
  - specification details: preconditions, given inputs, required outputs

- Tactics definition (Achieving QAs)
  - how to enforce required quality for given preconditions and inputs
  - tactics becomes part of the designed system

QAs in development process

- Every stage in development process further constrains space for QAs
- Architecture is on top level and thus most critical
- Architecture by itself cannot provide QAs
- QAs are achieved only by combination of:
  architecture (big picture) and non-architectural (details) choices, e.g. :

QA	***Architectural level***	***Design & implementation***
Usability of UI	redo/undo support	GUI layout *& coding*
Modifiability	*separation of concerns (e.g. independent modules)*	*coding techniques*
Performance	*usage of shared resources communication infrastructure*	*algorithms used optimization techniques*

QA scenarios (specifying requirements)

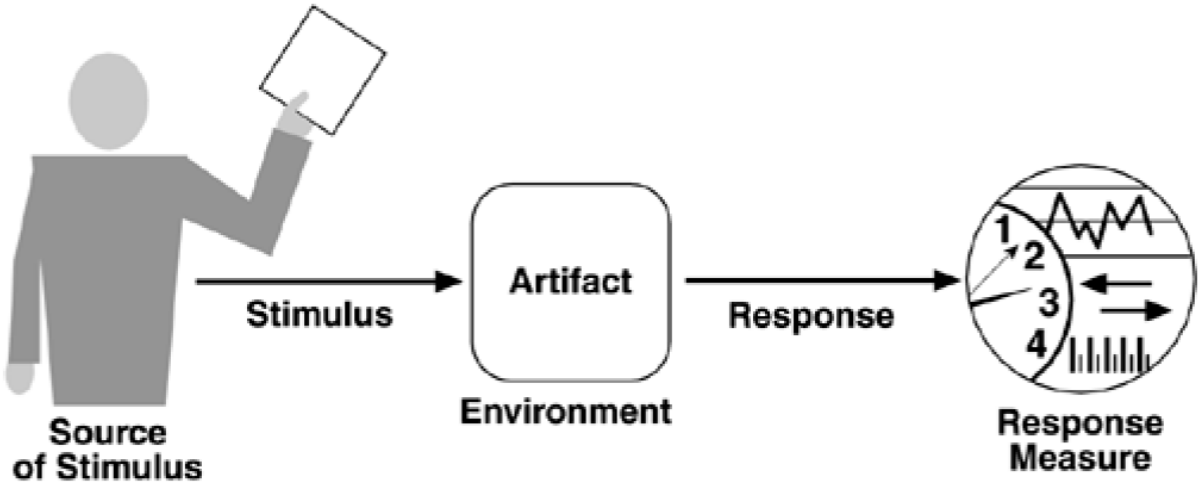

Goal: specify required outputs for a particular relevant situation

inputs:
- stimulus
- source of stimulus

required outputs:
- response
- response measure

preconditions:
- environment of the scenario (state of system)
- resources (artifacts) that are subject of the QA

Tactics definition (achieving QAs)

Goal: design tactics that guarantee required outputs for given inputs

inputs that origin from system:
- environment (state of system)
- affected resources (artifacts)

inputs that origin from stimulus:
- stimulus
- source of stimulus

Tactics

guaranteed outputs:
- response
- response measure

Johan J. Lukkien, j.j.lukkien@tue.nl
TU/e Informatica, System Architecture and Networking

Observations on the Ariane 5 example

- The recommendations are generic tactics to improve reliability
  - Minimize risk by keeping running code minimal during flight
  - Provide realistic test environment
  - Do not stop measurements (no ‘error exit’)
  - Provide backup facilities
  - Provide scenarios for handling failures of software
    - which is what we are discussing now
- Recommendations also focus on procedures
  - Review every component (sw+hw)
  - Review all software (identify implicit assumptions, missing scenarios..)
  - External reviewers requested (ones not involved in development)
  - Improve testing procedures
  - Proper documentation is as important as code
  - Transparent cooperation between partners needed
- Question: can you give corresponding scenario’s?

System qualities, metrics

- *Availability*
  - probability of the system being ready to use
- *Reliability*
  - mean time between failures
- *Modifiability*
  - about how difficult it is to introduce desired changes
- *Performance*
  - timely response to service request events, throughput, jitter
- *Security*
  - ability to resist unauthorized attempts to access data and services
- *Testability*
  - how difficult it is to verify the correctness of the system
- *Usability*
  - how much the system is user friendly
- *Scalability*
  - see before
- *Portability*
  - how difficult it is to port system to another platform

Question: can a system be
- highly available but unreliable?
- highly reliable but unavailable?

Notions

- **Failure**: not meeting the specification
- **Error**: system state that may lead to failure
- **Fault**: cause of an error. Fault types:
  - transient: exists and then disappears
  - intermittent: repeatedly; disappears in between
  - permanent: remains until repair
- **Note**: faults can occur for all system components
  - processes, channels, machines, data, ...

- *Availability* is concerned with system's *failure* to provide specified services.
  - failure is observable by the service user (another system or human operator)
  - Availability definition: MTTF / (MTTF + MTTR)
    - MTTR: time to repair is the time till the failure becomes not observable
    - MTTF: mean time to failure (= **reliability**)
- *Fault tolerant system*
  - A system that can continue to provide required or degraded service despite the presence of faults

Failure types

Type of failure	Description
Crash failure	A server halts, but is working correctly until it halts
Omission failure *Receive omission* *Send omission*	A server fails to respond to incoming requests A server fails to receive incoming messages A server fails to send messages
Timing failure	A server's response lies outside the specified time interval
Response failure *Value failure* *State transition failure*	The server's response is incorrect The value of the response is wrong The server deviates from the correct flow of control
Arbitrary failure (“byzantine”)	A server may produce arbitrary responses at arbitrary times

- **Note:** hard to distinguish some differences just by observation

Availability - QA scenarios

- *Source*
  - system external / system internal (other subsystem)
- *Stimulus*
  - fault: in external input, failure in subsystem, e.g. omission / crash / timing error / wrong input
  - exception raised when fault is detected
- *State of system (environment)*
  - for example: normal / degraded operation, overloaded system
- *Affected resources (artifacts)*
  - process, processor, storage, communication… or entire system
- *Response & tactics*
  - log, notify, disable, continue (normal/degraded), replicate, ...
- *Response measure*
  - repair time, availability, available/degraded time interval...

Availability - example of QA scenario

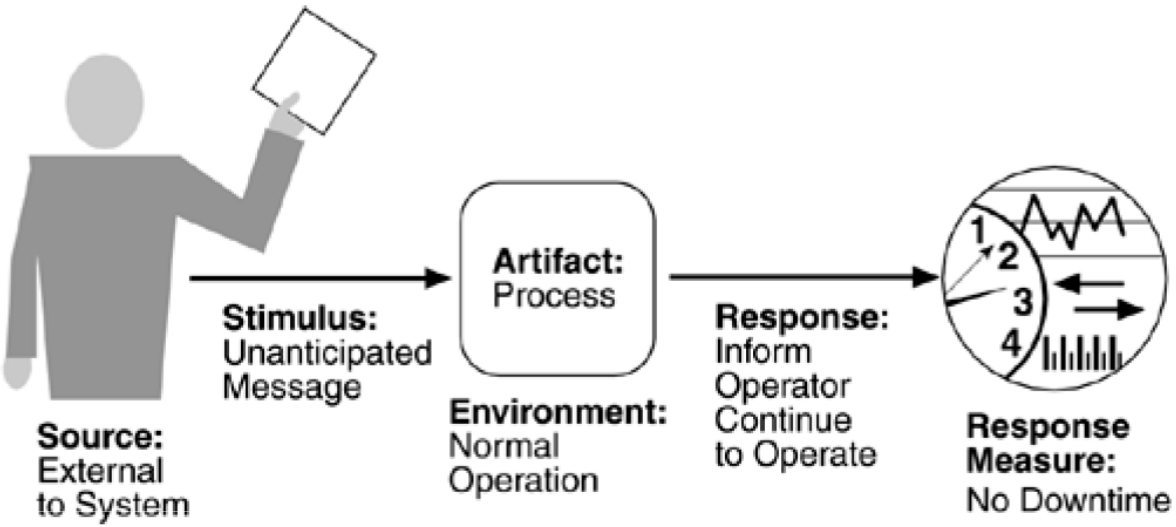

inputs:

- stimulus: unanticipated message
- source: external

required outputs:

- response: continue
- response measure: no downtime

preconditions:

- state of system: normal operation
- affected resource: process that handles messages

Availability - example of QA tactics

inputs that origin from stimulus:

- stimulus: unanticipated message
- source: external

inputs that origin from system:

- state: normal operation
- artifact: process handling messages

discard the message

guaranteed outputs:

- response: continue
- response measure: no downtime

Availability: tactics

- *Fault masking*
  - *Error detection*
  - *Error containment* (isolating from spreading further)
  - *Error diagnosis*
  - *Error recovery* (replacing erroneous state with error-free state)
- *Redundancy*
- *Fault prevention*
  - Transactions
  - Temporary *removal from service*

    e.g. occasionally restarting component to prevent memory leaks accumulating to the point of causing failure

Availability: error detection

- *Acceptance test*
  - checking correctness of results
- *Exceptions*
  - raised when error is detected
- *Watchdog timer*
  - timing error when result is not available in specified time
- *Ping/echo*
  - a component issues ping and measures the time till it receives an echo response
  - lack of echo indicates fault
- *Heartbeat*
  - a component emits heartbeat messages periodically and another component listens and measures the time (e.g. using watchdog)
  - lack of expected heartbeat message indicates a fault (e.g. node/network failure)

Mars Rover Pathfinder

- July 4, 1997, landing on Mars
- After a few days into the mission random resets occurred
  - after start of gathering meteorological data
- Attributed to ‘software glitches’ or ‘system overload’
- OS: VxWorks

- Cause: shared resource: information bus
  - high priority task: moves important information
  - low priority meteorological data gathering task: gets interrupted by a middle priority, unrelated task
  - a watchdog reset is triggered upon a long delay of the high priority task

  - .... priority inversion
  - .... forgot to declare the correspondent semaphore as ‘priority ceiling’ (or inheritance)

Availability: error recovery

- *Forward error recovery*
  - finding a new error-free state that will allow system to continue
  - often based on redundancy
  - predictable in terms of time and memory => applicable in real-time systems
- *Backward error recovery*
  - restoring previous error-free state
  - suited for handling transient faults
  - "checkpointing" is most widely used mechanism
    - needs *consistent cut* for restore
    - Consistent cut: a *possible* distributed state obeying causality of message passing

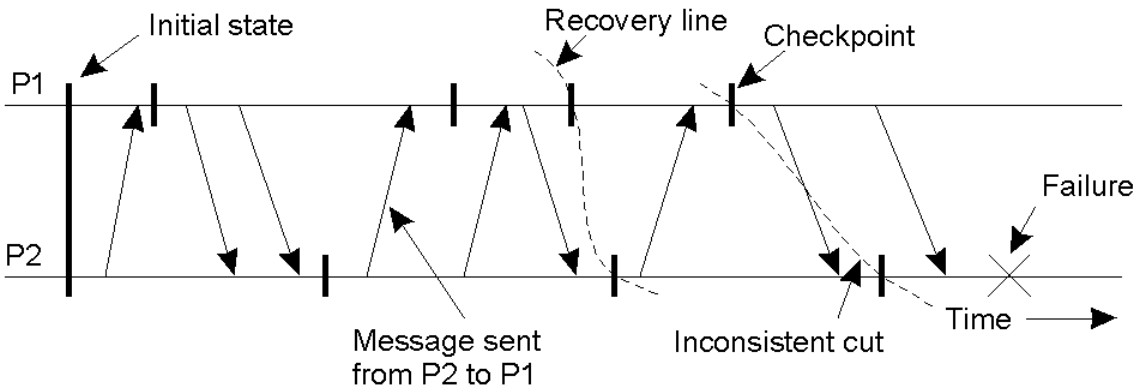

Availability: redundancy

- *Redundancy* (replication)
  - information: add extra bits
  - time: repeat failing operation (only useful for transient or intermittent faults)
  - physical redundancy: multiply hardware and/or software components

- *Active redundancy*
  - all replicas performing calculations in parallel
  - choice to deliver: first obtained (correct) result, result of preferred component (primary replica), or to perform “majority voting”
  - “synchronization” of replicas needed

- *Passive redundancy*
  - a replica activated only when previous replica fails (detected by watchdog or via an acceptance test)
    - example: a standby spare configured to jump in; during initialization reads last valid state from persistent memory (rollback)

Example: Primary backup

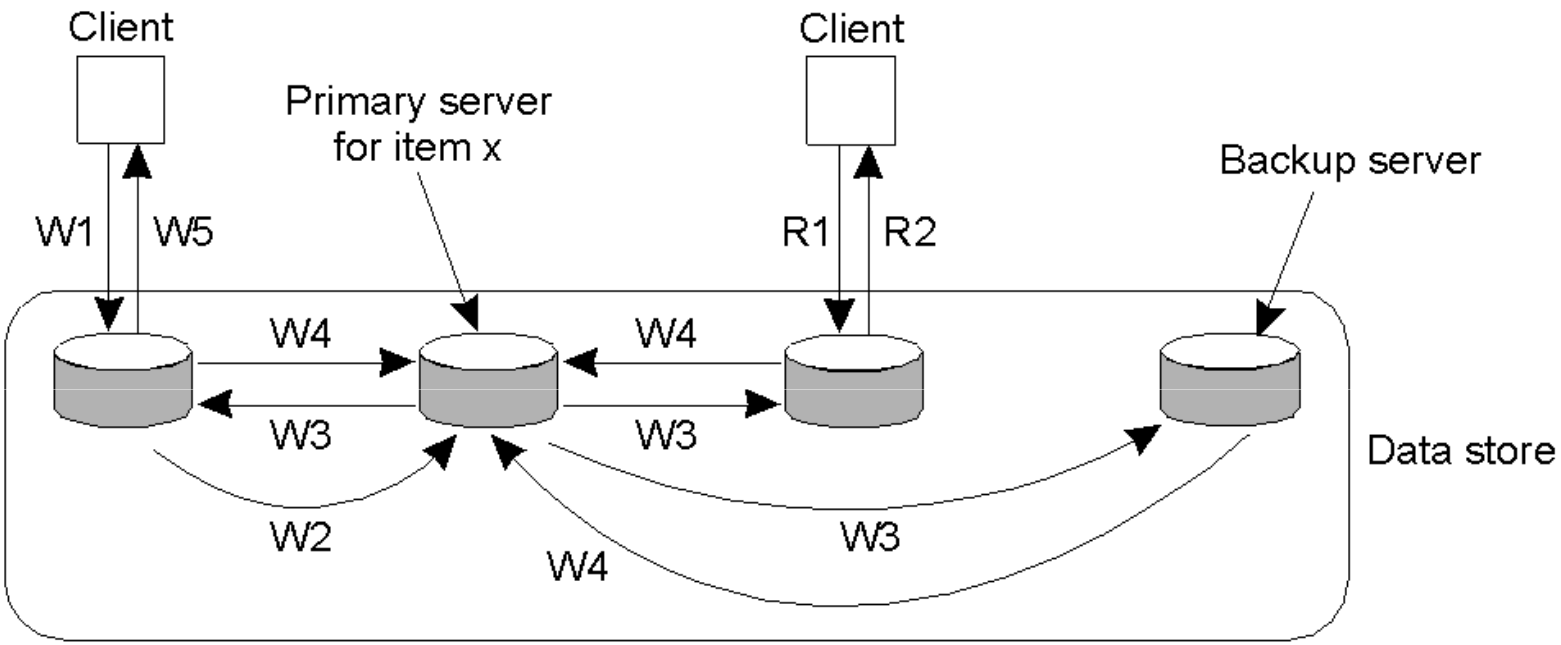

W1. Write request
W2. Forward request to primary
W3. Tell backups to update
W4. Acknowledge update
W5. Acknowledge write completed

R1. Read request
R2. Response to read

Example: triple modular redundancy

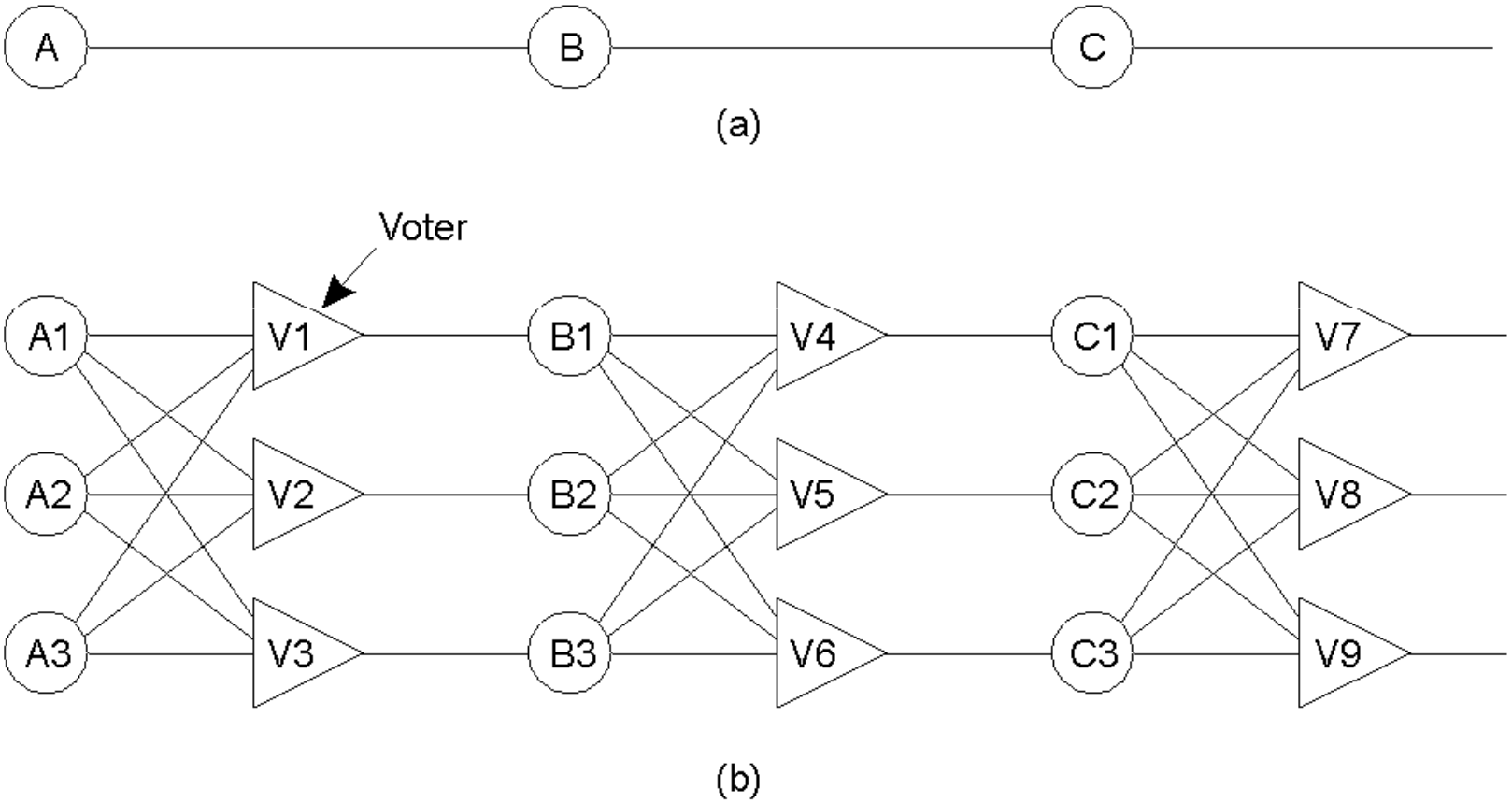

Availability prevention: transactions

- **Transaction: s**equence of actions, combined into a single operation with the ACID properties
  - **atomic**, i.e., taken ('committed') or not taken, indivisible
    - e.g. reserving an airline seat in a multi-flight trip
  - **consistent**, maintaining system invariants
    - e.g. no seats are lost
  - **isolated**, concurrent transactions appear serialized – transient states not observable
    - e.g. it becomes my seat or your seat; no reservation of just first seat visible
  - **durable**, a *committed* transaction is persistent
    - e.g. reservation indeed works

- **NOTE:** not completely independent notions

Availability: summary

- Availability and reliability improvements comprise mainly:
  - Improvement of reliability
    - restricting the (probability of) occurrence of faults/errors
    - dealing systematically with partial failures
  - Restricting down time

- Together these techniques are referred to as *fault tolerance* techniques

System qualities, metrics

- *Availability*
  - probability of the system being ready to use
- *Reliability*
  - mean time between failures
- *Modifiability*
  - about how difficult it is to introduce desired changes
- *Performance*
  - timely response to service request events, throughput, jitter
- *Security*
  - ability to resist unauthorized attempts to access data and services
- *Testability*
  - how difficult it is to verify the correctness of the system
- *Usability*
  - how much the system is user friendly
- *Scalability*
  - see before
- *Portability*
  - how difficult it is to port system to another platform

Modifiability

Modifiability is concerned with the cost of system change....

- *Directly affected modules*
  - their responsibilities need adjustment
- *Indirectly affected modules*
  - need to change due to cooperation with directly affected modules

... and with the time and effort to do it

- Objective: Reduce time to deploy
  - modification done by developer requires testing and distribution process
  - time lag between making change and making it available to the user
- ....allow late change or even non-developers to make changes

Derived quality attributes

- usability – modifiability offered to the user in user interface
- portability – modifiability of the platform

Modifiability - QA scenario elements

- *Source*
  - end user / developer / operator
- *Stimulus*
  - change request concerning function / quality / capacity
- *State of system (environment)*
  - during analysis / at design time / compile time / build time / initiation time, runtime / before release/ after release / during testing…
- *Affected resources (artifacts)*
  - functionality / platform / user interface / environment…
- *Response & tactics*
  - normal design sequence of specify, change, test, deploy
  - limit dependencies, select appropriate styles
- *Response measure*
  - all response activities cost time and money which can be measured (manpower spec e.g. 3 man-years)...

Modifiability - example of QA tactics

inputs that origin from stimulus:

- source : end-user
- stimulus: changes in GUI (expected to occur frequently)

inputs that origin from system:

- state: development
- artifact: GUI application

use MVC (model-view-controller) architectural style

guaranteed outputs:

- response: views can be changed independently and without need to rewrite model
- response measure: manpower needed for a change (e.g. 5 man-month)

Modifiability tactics: coupling and cohesion

- Dependencies between components or modules
  - arise from assumptions about peer components regarding
    - (existence of) data/service, QoS of these
    - syntax/semantics
    - data/control flow
    - interfaces
    - location
    - resource behavior

- *Coupling:* the degree of dependence *between* two components

- *Cohesion:* the degree of coherence of the functions (responsibilities) *within* a component

- Terms: see e.g. M. Page-Jones, *The practical guide to structured system design*, Prentice-Hall, 1988.

Coupling and Cohesion

- Cohesion (coherence) is somewhat subjective
  - coherent *with respect to what*?

- Classical distinction (next slide)
  - functional, informational, (sequential), communicational
    - good
  - procedural, temporal logical, coincidental
    - bad

Cohesion types

cohesion type	*description*	*example*	*coupling*	*reuse*
functional	single independent function	ComputeOrbit	+++	+++
informational	operations using the same data, with separate entry points	GetName(Customer), GetAddress(Customer)	+++	+++
communicational	operations on same data	Update(Customer) and WriteBack(Customer)	++	---
procedural	operations in component describe some workflow	"All Operations on input record"	-	---
temporal	operations put together because they happen at a certain stage	(re)initialization of global variables; operations upon termination	---	---
logical	similar category operations	do all input	---	---
(coincidental)			-------	-----

Modifiability tactics: *"Localize modification"*

- Maintain semantic coherence: reduce coupling and increase cohesion
  - the 'good' cohesion
- Abstract common services
  - special case of maintaining semantic coherence
  - idea is to abstract common services, so that changing them is done on a single place e.g. in application frameworks and middleware
- Anticipate expected changes
  - for each anticipated change limit the influenced modules
  - It is not possible to anticipate all changes => assume that expected changes will be in semantically coherent modules
- Generalize the module
  - more general module is more resilient to changes
    - e.g. exchanging data via XML files yields more resilience to the changes of actual data format
    - e.g. the interpreter style idea is that changes will be in provided scripting language programs and not in interpreter
- Limit options

Modifiability tactics: *"Prevent ripple effects"*

- Hide information
  - isolate possible changes by keeping them away from interfaces
  - related to "anticipate expected changes" tactic

- Maintain existing interfaces
  - interface stability is achieved by clear separation between interface and implementation
    - Parnas' principle,
  - "adding interfaces" instead of changing them
  - restrict communication paths

- Insert intermediary between modules
  - special case of maintaining existing interfaces
  - e.g. blackboard and MVC architectural styles
  - e.g. Façade, bridge, mediator, strategy, proxy and factory design patterns

Modifiability tactics: “Defer binding time”

- Runtime registration
  - plug-and-play operation
- Configuration files
  - used to setup parameters at startup rather than putting them in code
- Polymorphism
  - late bindings of method calls
- Component replacement
  - load time binding
- Runtime binding of independent services
  - allowed by adherence to defined protocols and interfaces

Modifiability: summary

- Modifiability is addressed within the development view....
  - modules, interfaces, decomposition into subsystems and components: cohesion/coupling
- .... within the process view....
  - binding, configuration
- ... through the applied styles and frameworks