Real-Time Software Workshop

Workshop Solutions “Light Controller”

Onno van Roosmalen
O.S.vanRoosmalen@chello.nl

Version July 2016

Composite Structure Design

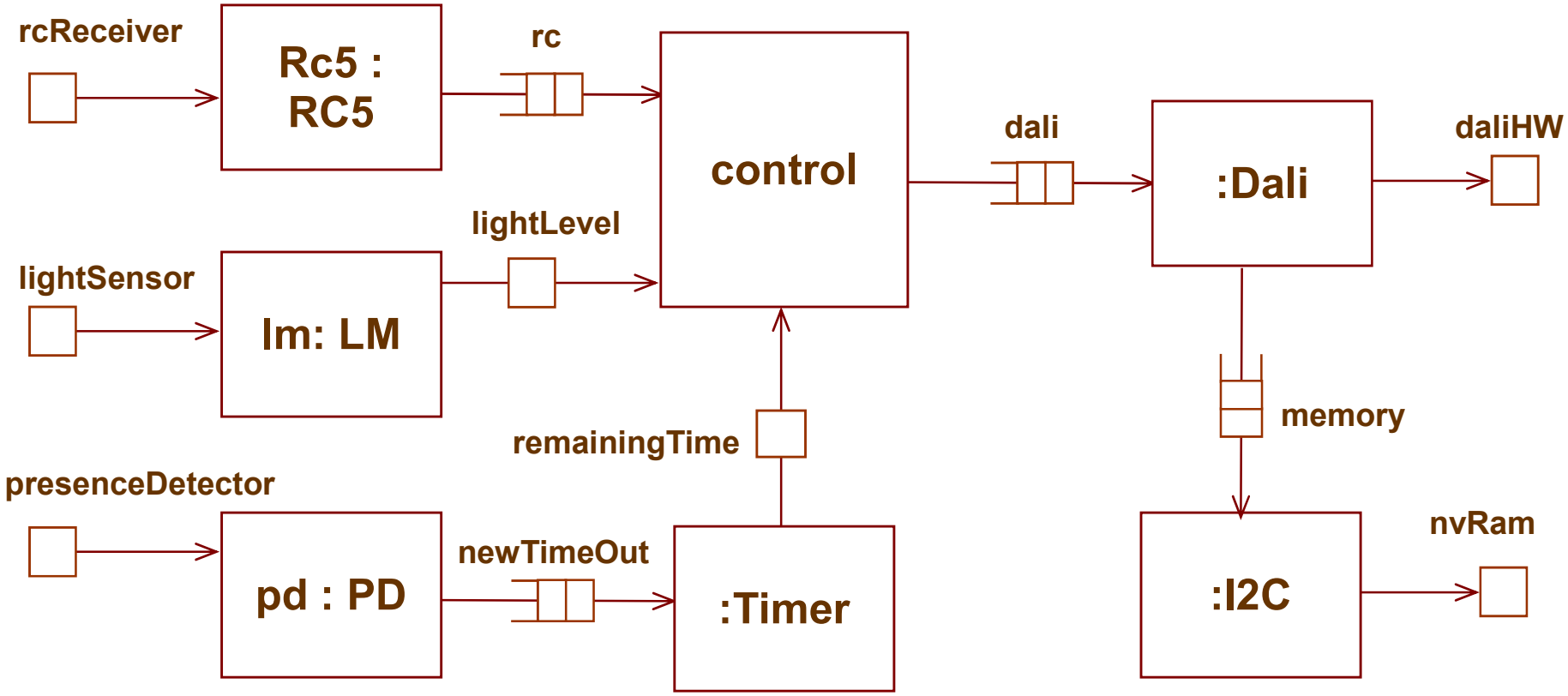

Response Times

Process	Response Time
Dali	100 μs
RC5	170 μs
Timer	200 μs
LM	μs
I2C	μs
PD	μs
Main	μs

Response not within deadline
100 μs > 41 μs

No valid response time within period

Timing Diagram

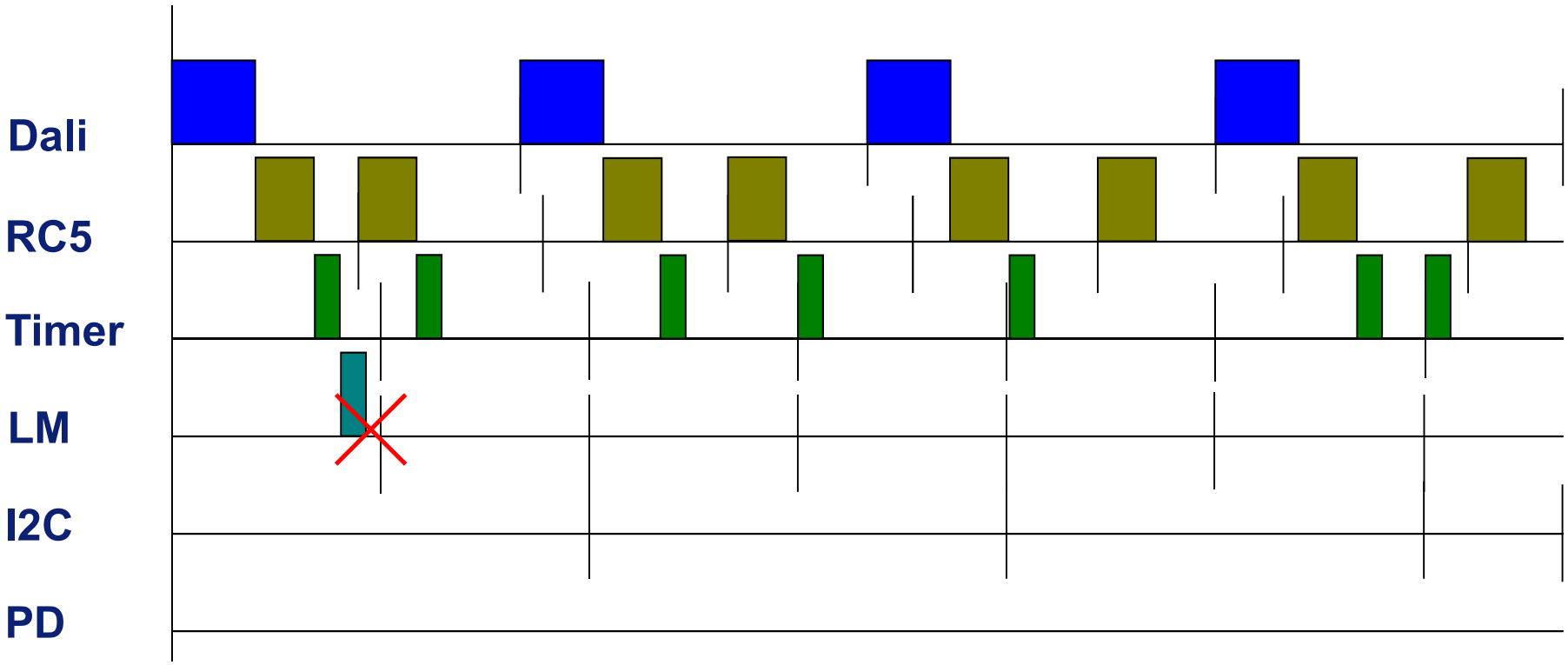

Meeting Timing Requirements

- The Dali response time (100 μs) is not within the deadline (41 μs).
- One could try to put the daliHW instructions early in the body of the Dali process body.
- However, doing so it is still difficult to analyze if the daliHW settings will be timely.
- Also, this will not work if there is more than one dali to control

Dali Process

- Proper solution: split the Dali process into two parts

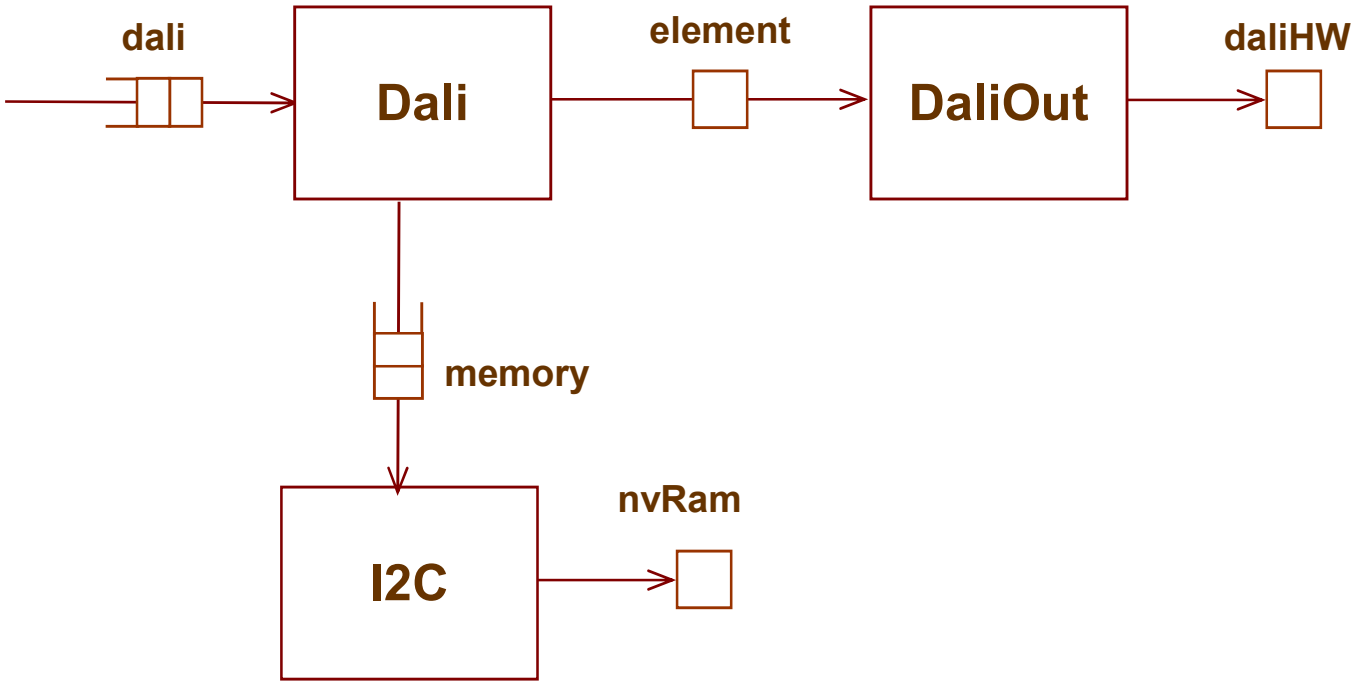

Dali Process

P_{Dali} (T) ::=

```
state= Idle;
while(waitForNextPeriod(T)) {
    if(state == Idle) {
        if( !dali.isEmpty() ) {
            element=start;
            daliCommand = dali.get();
            memory.put(daliCommand, address);
            state=Sending;
        }
    } else if (state == Sending) {
        if( daliCommand.atEnd() ) {
            element=stop;
            state=Idle;
        } else {
            element = daliCommand.nextElement();
        }
    }
}
```

DaliOut Process

$P_{DaliOut}$ (T) ::=

```
while(waitForNextPeriod(T)) {
    daliHW=element;
}
```

Dali: Remark

- 25 ms between dali commands
- The dali should also use a timer.
  - This timer can be merged with the one we already have (temporal cohesion).

Timings

Module	Ci (μs)	Ti (μs)	Di (μs)	Priority
DaliOut	10	416	41	1
RC5	70	222	=Ti	2
Timer	30	250	=Ti	3
LM	30	250	=Ti	4
Dali	100	416	=Ti	5
I2C	40	500	=Ti	6
PD	30	10000	=Ti	7
Main	400	40000	=Ti	8

Assignment 9

- To proof schedulability we must compute the response times of the various tasks in the modified design.

Response Times

Process	Response Time
DaliOut	10 μs
RC5	80 μs
Timer	110 μs
LM	140 μs
Dali	370 μs
I2C	410 μs
PD	1200 μs
Main	4960 μs

Response within deadline 41 μs
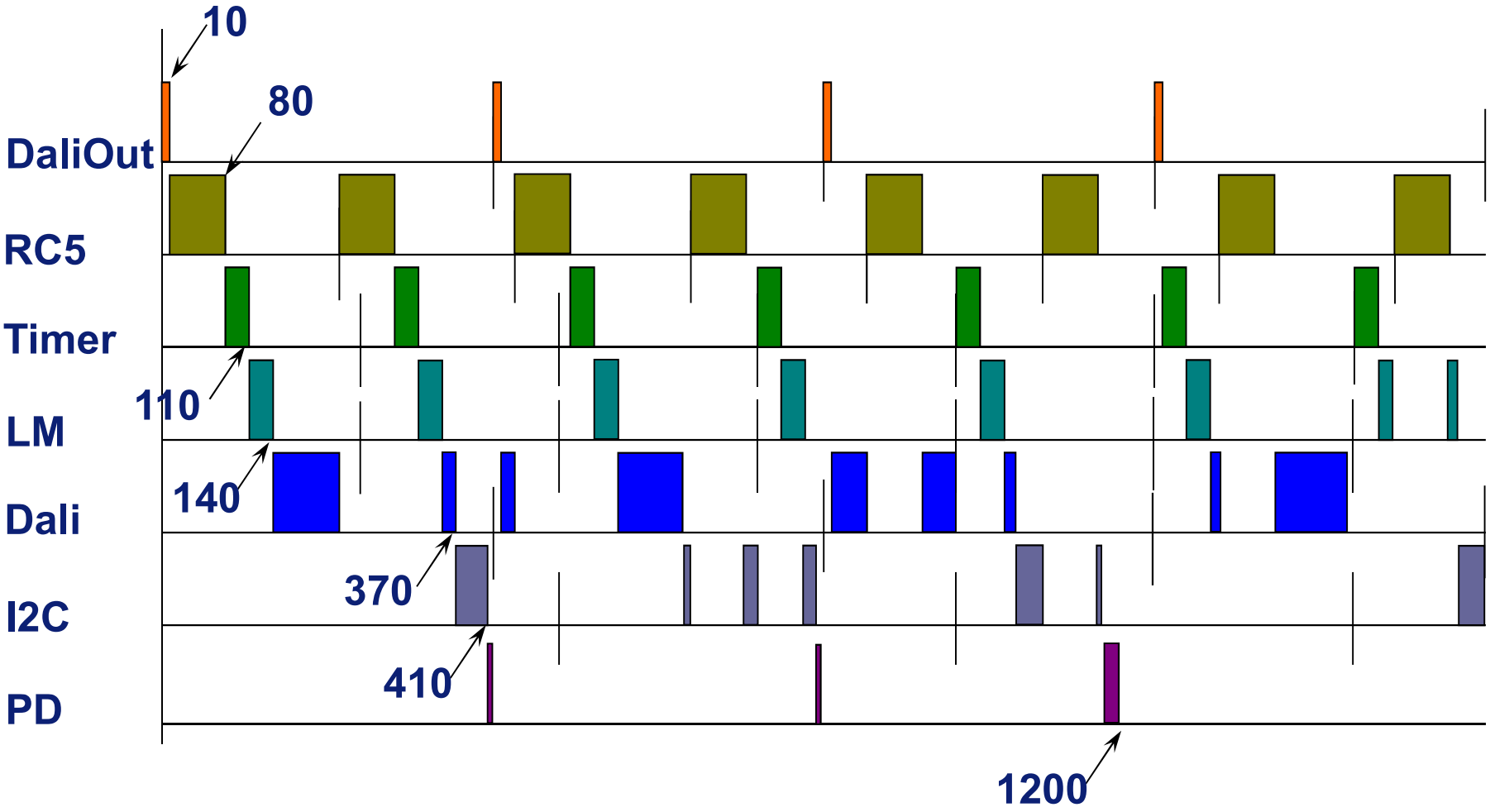
Timing Diagram