EXAMINATION TENSOR CALCULUS AND DIFFERENTIAL GEOMETRY

Course code: 2WAH0-2WAH1. Date: Tuesday June 23, 2015. Time: 18h00–21h00. Place: AUD 14.

Read this first!

- Write your name and student identification number on each paper.
- The exam consists of 2 problems. The maximum credit for each item is indicated in the margin.
- Motivate your answers in mathematically rigorous terms.
- Einstein summation convention applies throughout for all repeated pairs of upper and lower indices.
- You may consult an immaculate hardcopy of the online draft notes "Tensor Calculus and Differential Geometry (2WAH0)" by Luc Florack. No equipment may be used.

(**50**) **1.** RIEMANNIAN METRIC

Recall the positivity and non-degeneracy conditions for a Riemannian metric $\mathbf{G} : \mathrm{TM} \times \mathrm{TM} \to \mathbb{R}$: $\mathbf{G}(\mathbf{v}, \mathbf{v}) = (\mathbf{v}|\mathbf{v}) = g_{ij} v^i v^j \geq 0$ for any $\mathbf{v} = v^i \partial_i$ (positivity), with equality if and only if $\mathbf{v} = \mathbf{0}$ (non-degeneracy). We denote by g the determinant of the matrix with entries g_{ij}.

(5) **a1.** Show that, in general, positivity implies $g \geq 0$.

A real symmetric matrix has real eigenvalues, the product of which equals its determinant. In particular, the semi-positive real symmetric matrix with entries g_{ij} has nonnegative eigenvalues.

(5) **a2.** Show that, in general, non-degeneracy is equivalent to $g \neq 0$.

Suppose $g = 0$, then the matrix with entries g_{ij} has a zero eigenvalue, vice versa. An associated eigenvector $\mathbf{v} = v^i \partial_i \neq \mathbf{0}$ satisfies $g_{ij} v^j = 0$, whence $(\mathbf{v}|\mathbf{v}) = g_{ij} v^i v^j = 0$, contradicting the non-degeneracy requirement.

We now stipulate a particular 3-dimensional Riemannian metric of the form

$$\mathbf{G} = dx \otimes dx + dy \otimes dy + dz \otimes dz - (adx + bdy + cdz) \otimes (adx + bdy + cdz)\,,$$

in which $dx, dy, dz \in \mathrm{T}^*\mathrm{M}$ are coordinate one-forms and $a, b, c \in \mathbb{R}$ are constants.

(5) **b1.** Show that, in this case, non-degeneracy is equivalent to $a^2 + b^2 + c^2 \neq 1$.

We have

$$g = \det \begin{pmatrix} 1-a^2 & -ab & -ac \\ -ab & 1-b^2 & -bc \\ -ac & -bc & 1-c^2 \end{pmatrix} = 1 - a^2 - b^2 - c^2 \,,$$

from which the result follows, recall a.

(5) **b2.** Likewise, show that positive-definiteness of the metric implies $a^2 + b^2 + c^2 < 1$.

Positive-definiteness of the metric implies that all eigenvalues are positive, whence $g > 0$. According to b1 this means that $a^2+b^2+c^2 < 1$.

Next we consider the tensor $\mathbf{P} = p_{ij} dx^i \otimes dx^j$, with $p_{ij} = g_{ij} - \omega_i \omega_j$, in which now g_{ij} are the components of a genuine (positive-definite, non-degenerate) Riemannian metric, and $\omega_i = g_{ij} e^j$ are the covariant components of the dual $\boldsymbol{\omega} \in \mathrm{T^*M}$ of a given *unit vector* $\mathbf{e} \in \mathrm{TM}$, i.e. $(\mathbf{e}|\mathbf{e}) = g_{ij} e^i e^j = 1$ and $\langle \boldsymbol{\omega}, \mathbf{e} \rangle = \omega_j e^j = 1$.

(5) **c.** Show that $\langle \mathbf{P}(\mathbf{u}), \mathbf{e} \rangle = 0$ for any vector $\mathbf{u} = u^i \partial_i$.

For an arbitrary vector $\mathbf{u} = u^i \partial_i$ we have $\mathbf{P}(\mathbf{u}) = p_{ij}(dx^i \otimes dx^j)(u^k \partial_k) = p_{ij} u^k \delta^i_k dx^j = p_{ij} u^i dx^j$, whence $\langle \mathbf{P}(\mathbf{u}), \mathbf{e} \rangle = p_{ij} u^i e^k \langle dx^j, \partial_k \rangle = p_{ij} u^i e^k \delta^j_k = p_{ij} u^i e^j = (g_{ij} - \omega_i \omega_j) u^i e^j = u_j e^j - \omega_i u^i = g_{ij}(u^i e^j - e^j u^i) = 0$. Note that the image $\mathbf{P}(\mathbf{u}) \in \mathrm{T^*M}$ of $\mathbf{u} \in \mathrm{T^*M}$ is a covector. A vectorial image may be obtained straightforwardly, viz. by considering $\flat(\mathbf{P}(\mathbf{u})) \in \mathrm{TM}$. In the latter sense $\mathbf{P}$ can be interpreted as a projection onto the plane perpendicular to the vector $\mathbf{e}$.

A special *g-orthonormal basis* $\{\mathbf{e}_\alpha = e^i_\alpha \partial_i\}_{\alpha=1,\ldots,n}$ relative to the metric $\mathbf{G} = g_{ij} dx^i \otimes dx^j$ is one for which $\mathbf{G}(\mathbf{e}_\alpha, \mathbf{e}_\beta) = (\mathbf{e}_\alpha | \mathbf{e}_\beta) = g_{ij} e^i_\alpha e^j_\beta = \delta_{\alpha\beta}$, in which $\delta_{\alpha\beta} = 1$ and $\delta^{\alpha\beta} = 1$ if $\alpha = \beta$ and 0 otherwise. The corresponding dual basis is $\{\boldsymbol{\omega}^\alpha = \omega^\alpha_i dx^i\}_{\alpha=1,\ldots,n}$.

(5) **d.** Show that g-orthonormality of a basis is preserved under orthogonal transformations.
(Hint: A matrix $\mathbf{A}$ corresponding to an orthogonal transformation satisfies $\mathbf{A}^T \mathbf{A} = \mathbf{I}$.)

Suppose $\{\mathbf{e}_\alpha\}$ is g-orthonormal. Consider a linear basis transformation, with $\mathbf{f}_\alpha = A^\beta_\alpha \mathbf{e}_\beta$ say, then $\{\mathbf{f}_\alpha\}$ is g-orthonormal iff $\left(\mathbf{f}_\alpha | \mathbf{f}_\beta\right) = \delta_{\alpha\beta}$. Inserting $\mathbf{f}_\alpha = A^\gamma_\alpha \mathbf{e}_\gamma$ and $\mathbf{f}_\beta = A^\delta_\beta \mathbf{e}_\delta$ and using g-orthonormality of $\{\mathbf{e}_\alpha\}$ yields $A^\gamma_\alpha A^\delta_\beta \delta_{\gamma\delta} = \delta_{\alpha\beta}$, or, in matrix form, $\mathbf{A}^T \mathbf{A} = \mathbf{I}$, which is the defining equation for orthogonal matrices.

(5) **e1.** Show that $\delta^\alpha_\beta = \omega^\alpha_i e^i_\beta$.

By duality of both $\{\boldsymbol{\omega}^\alpha, \mathbf{e}_\beta\}$ and $\{dx^i, \partial_j\}$, using the decompositions $\boldsymbol{\omega}^\alpha = \omega^\alpha_i dx^i$ and $\mathbf{e}_\beta = e^i_\beta \partial_i$, we have $\delta^\alpha_\beta = \langle \boldsymbol{\omega}^\alpha, \mathbf{e}_\beta \rangle = \omega^\alpha_i e^j_\beta \langle dx^i, \partial_j \rangle = \omega^\alpha_i e^j_\beta \delta^i_j = \omega^\alpha_i e^i_\beta$.

(5) **e2.** Show that $\delta^i_j = e^i_\alpha \omega^\alpha_j$.
(Hint: Contract ω^β_j onto the result of e1.)

Contracting ω^β_j onto the result of e1 yields $\omega^\alpha_j = \delta^\alpha_\beta \omega^\beta_j \overset{\text{e1}}{=} \omega^\alpha_i e^i_\beta \omega^\beta_j$, from which it follows that $e^i_\beta \omega^\beta_j = \delta^i_j$.

(5) **e3.** Show that $g_{ij} = \omega^\alpha_i \delta_{\alpha\beta} \omega^\beta_j = \sum_\alpha \omega^\alpha_i \omega^\alpha_j$.
(Hint: First show that e2 implies $\partial_i = \omega^\alpha_i \mathbf{e}_\alpha$.)

We have $\partial_i = \delta^k_i \partial_k \overset{\text{e2}}{=} e^k_\alpha \omega^\alpha_i \partial_k = \omega^\alpha_i \mathbf{e}_\alpha$, whence $g_{ij} = (\partial_i | \partial_j) = \left(\omega^\alpha_i \mathbf{e}_\alpha | \omega^\beta_j \mathbf{e}_\beta\right) = \omega^\alpha_i \omega^\beta_j \left(\mathbf{e}_\alpha | \mathbf{e}_\beta\right) = \omega^\alpha_i \delta_{\alpha\beta} \omega^\beta_j = \sum_\alpha \omega^\alpha_i \omega^\alpha_j$.

(5) **e4.** Show that $g^{ij} = e^i_\alpha \delta^{\alpha\beta} e^j_\beta = \sum_\alpha e^i_\alpha e^j_\alpha$.

By analogy to the proof of e3 we may proceed by first showing that $dx^i = e^i_\alpha \boldsymbol{\omega}^\alpha$, viz. $dx^i = \delta^i_k dx^k \overset{\text{e2}}{=} e^i_\alpha \omega^\alpha_k dx^k = e^i_\alpha \boldsymbol{\omega}^\alpha$. Then, using the inner product on the cotangentbundle we obtain $g^{ij} = \left(dx^i | dx^j\right)_* = \left(e^i_\alpha \boldsymbol{\omega}^\alpha | e^j_\alpha \boldsymbol{\omega}^\beta\right)_* = e^i_\alpha e^j_\beta \left(\boldsymbol{\omega}^\alpha | \boldsymbol{\omega}^\beta\right)_* = e^i_\alpha \delta^{\alpha\beta} e^j_\beta = \sum_\alpha e^i_\alpha e^j_\alpha$. Alternatively we may show that the stipulated r.h.s. is indeed the contravariant holor of the dual metric, viz. $g_{ik} e^k_\alpha \delta^{\alpha\beta} e^j_\beta \overset{\star}{=} \omega^\beta_i e^j_\beta = \delta^j_i$, so that indeed $e^k_\alpha \delta^{\alpha\beta} e^j_\beta = g^{kj}$. In $\star$ we have used duality: $g_{ik} e^k_\alpha \delta^{\alpha\beta} = \omega^\beta_i$.

♣

(**50**) **2.** MASSIVE VECTOR BOSONS

We consider 4-dimensional spacetime, endowed with a non-positive "Minkowski metric" $\boldsymbol{G} = \eta_{\mu\nu} dx^\mu \otimes dx^\nu$. The corresponding non-positive, symmetric, non-degenerate bilinear form, or "inner product", of two 4-vectors, $\mathbf{v} = v^\mu \partial_\mu$ and $\mathbf{w} = w^\mu \partial_\mu$ say, is denoted by $\mathbf{v} \cdot \mathbf{w} = v^\mu \eta_{\mu\nu} w^\nu$.

We henceforth restrict ourselves to so-called "inertial systems", in which, by definition, the components of the covariant metric tensor are $\eta_{00} = 1$, $\eta_{11} = \eta_{22} = \eta_{33} = -1$, and $\eta_{\mu\nu} = 0$ otherwise ($\mu, \nu = 0, 1, 2, 3$). The defining inertial coordinates are indicated by $(x^0, x^1, x^2, x^3) = (ct, x, y, z) = (ct, \vec{x}) \in \mathbb{R}^4$, in which $c \approx 3.00 \times 10^8$ m/s denotes the universally constant speed of light in vacuum.

A so-called "Lorentz transformation" relates two inertial systems, with coordinates $x \in \mathbb{R}^4$ and $\overline{x} \in \mathbb{R}^4$, say, preserving the components of the Minkowski metric as stated above.

(5) **a1.** Show that if $x^\mu = L^\mu_\nu \overline{x}^\nu$ is a Lorentz transformation, then the components L^μ_ν must satisfy the condition $L^\mu_\rho \eta_{\mu\nu} L^\nu_\sigma = \eta_{\rho\sigma}$.
(Hint: Set $\overline{\eta}_{\mu\nu} d\overline{x}^\mu \otimes d\overline{x}^\nu = \eta_{\mu\nu} dx^\mu \otimes dx^\nu$ and impose the defining *invariance* property $\overline{\eta}_{\mu\nu} = \eta_{\mu\nu}$.)

On the one hand we have $\eta_{\mu\nu} dx^\mu \otimes dx^\nu = \eta_{\mu\nu} \dfrac{\partial x^\mu}{\partial \overline{x}^\rho} \dfrac{\partial x^\nu}{\partial \overline{x}^\sigma} d\overline{x}^\rho \otimes d\overline{x}^\sigma \overset{\text{def}}{=} \overline{\eta}_{\rho\sigma} d\overline{x}^\rho \otimes d\overline{x}^\sigma$ ("covariance"). On the other hand we have $\overline{\eta}_{\rho\sigma} = \eta_{\rho\sigma}$ ("invariance"). Noting that $\dfrac{\partial x^\mu}{\partial \overline{x}^\rho} = L^\mu_\rho$ this yields $L^\mu_\rho \eta_{\mu\nu} L^\nu_\sigma = \eta_{\rho\sigma}$.

(5) **a2.** Show that Lorentz transformations are closed under composition. In other words, show that the effective transformation $x \to \overline{\overline{x}}$ resulting from two consecutive Lorentz transformations, $x \to \overline{x} \to \overline{\overline{x}}$ say, is itself a Lorentz transformation.

Performing two Lorentz transformations $x \to \overline{x} \to \overline{\overline{x}}$ in a row yields $x^\mu = L^\mu_\nu \overline{x}^\nu = L^\mu_\nu \overline{L}^\nu_\rho \overline{\overline{x}}^\rho$. Considering the matrix $\Lambda^\mu_\rho = L^\mu_\nu \overline{L}^\nu_\rho$ we have $\Lambda^\mu_\rho \eta_{\mu\nu} \Lambda^\nu_\sigma = L^\mu_\alpha \overline{L}^\alpha_\rho \eta_{\mu\nu} L^\nu_\beta \overline{L}^\beta_\rho \overset{*}{=} \overline{L}^\alpha_\rho \eta_{\alpha\beta} \overline{L}^\beta_\sigma \overset{*}{=} \eta_{\rho\sigma}$, from which it follows that Λ^μ_ν is indeed the matrix representation of a Lorentz transformation. In $*$ we have used the defining property of a Lorentz transformation.

An *energy-momentum vector* $\mathbf{p} = p^\mu \partial_\mu$ has a corresponding representation in terms of a *wave vector* $\mathbf{k} = k^\mu \partial_\mu$ given by $\mathbf{p} = \hbar \mathbf{k}$, in which $\hbar \approx 1.05 \times 10^{-34}$ J s denotes Planck's constant. The following notation is often used for the components:

$$\mathbf{k} = (k^0, k^1, k^2, k^3) = (k^0, \vec{k}) = (\omega/c, \vec{k}),$$

in which $\omega \in \mathbb{R}$ and $\vec{k} \in \mathbb{R}^3$ denote temporal angular frequency and spatial frequency 3-vector, and

$$\mathbf{p} = (p^0, p^1, p^2, p^3) = (p^0, \vec{p}) = (E/c, \vec{p}),$$

in which $E \in \mathbb{R}$ and $\vec{p} \in \mathbb{R}^3$ denote energy and momentum 3-vector, respectively. These are to be distinguised from their dual (covector) counterparts $\widehat{\mathbf{k}} = k_\mu dx^\mu$ and $\widehat{\mathbf{p}} = p_\mu dx^\mu$.

($2\frac{1}{2}$) **b.** Show that, in any inertial frame, $\widehat{\mathbf{k}} = (k^0, -k^1, -k^2, -k^3) = (k^0, -\vec{k}) = (\omega/c, -\vec{k})$, respectively $\widehat{\mathbf{p}} = (p^0, -p^1, -p^2, -p^3) = (p^0, -\vec{p}) = (E/c, -\vec{p})$.

From $k_\mu = \eta_{\mu\nu} k^\nu$ it follows that $k_0 = \eta_{0\nu} k^\nu \stackrel{*}{=} \eta_{00} k^0 = k^0$, and $k_i = \eta_{i\nu} k^\nu \stackrel{*}{=} \eta_{ii} k^i = -k^i$. In $*$ we have used the explicit diagonal form of the Minkowski metric in an inertial frame; in particular, no summation is implied over the repeated index i in the latter expression.

We consider a force field $F \stackrel{\text{def}}{=} dA$, generated by a covector-valued potential field $A = A_\nu dx^\nu$ through exterior derivation: $dA = \partial_\mu A_\nu \, dx^\mu \wedge dx^\nu$. The components of F relative to a standard tensor basis $\{dx^\mu \otimes dx^\nu\}$ are given by $F_{\mu\nu}$, i.e. $F = F_{\mu\nu} \, dx^\mu \otimes dx^\nu$.

($2\frac{1}{2}$) **c1.** Show that $F_{\mu\nu} = \partial_\mu A_\nu - \partial_\nu A_\mu$.

We have $F = dA = \partial_\mu A_\nu \, dx^\mu \wedge dx^\nu = \frac{1}{2}(\partial_\mu A_\nu - \partial_\nu A_\mu) \, dx^\mu \wedge dx^\nu = (\partial_\mu A_\nu - \partial_\nu A_\mu) \, dx^\mu \otimes dx^\nu \stackrel{\text{def}}{=} F_{\mu\nu} \, dx^\mu \otimes dx^\nu$.

($2\frac{1}{2}$) **c2.** Show that, alternatively, $F = \frac{1}{2} F_{\mu\nu} \, dx^\mu \wedge dx^\nu$.

According to c1 we have $F = \frac{1}{2}(\partial_\mu A_\nu - \partial_\nu A_\mu) \, dx^\mu \wedge dx^\nu \stackrel{\text{c1}}{=} \frac{1}{2} F_{\mu\nu} \, dx^\mu \wedge dx^\nu$.

The (contravariant components of the) potential field, $A^\mu = \eta^{\mu\nu} A_\nu$, satisfy the *Proca equation*,

$$\partial_\mu F^{\mu\nu} + \frac{m^2 c^2}{\hbar^2} A^\nu = 0 \,,$$

in which $m > 0$ is some mass parameter. This field equation describes so-called "massive vector bosons" (massive counterparts of the familiar massless photon in electromagnetism).

($2\frac{1}{2}$) **d1.** Show that the components of the potential field are not independent, but satisfy $\partial \cdot A = \partial_\mu A^\mu = 0$.

Since $F^{\mu\nu}$ is antisymmetric we have $\partial_\nu \partial_\mu F^{\mu\nu} = 0$. Thus by applying ∂_ν to the l.h.s. of the Proca equation we obtain $\frac{m^2 c^2}{\hbar^2} \partial_\nu A^\nu = 0$. For nonzero mass m this implies that A is divergence-free, thus its four components are not mutually independent.

(5) **d2.** Show that the Proca equation can be rewritten as $(\partial^2 + \frac{m^2 c^2}{\hbar^2}) A^\nu = 0$, in which $\partial^2 = \eta^{\mu\nu} \partial_\mu \partial_\nu$ (i.e. the so-called d'Alembertian).

This follows from rewriting the first term on the l.h.s. of the Proca equation: $\partial_\mu F^{\mu\nu} = \partial_\mu (\partial^\mu A^\nu - \partial^\nu A^\mu) = \partial^2 A^\nu - \partial^\nu (\partial \cdot A)$. The second term on the r.h.s. vanishes, recall d1 (note that in an inertial system ∂_μ and ∂^ν commute).

We use the following Fourier convention in Minkowski space (in an inertial system):

$$f(x) = \frac{1}{(2\pi)^4} \int_{\mathbb{R}^4} e^{-ik \cdot x} \hat{f}(k) dk \,,$$

in which $k \cdot x = \eta_{\mu\nu} k^\mu x^\nu$ and $dk = dk^0 dk^1 dk^2 dk^3$. (A $\hat{}$ henceforth denotes Fourier transform.) We take for granted that $f = 0$ is equivalent to $\hat{f} = 0$ ("completeness of the Fourier basis").

(5) **e1.** Show that the condition on the potential field (recall d1) is equivalent to $k \cdot \hat{A}(k) = \eta_{\mu\nu} k^\mu \hat{A}^\nu(k) = 0$.

Substituting $A^\mu(x) = \frac{1}{(2\pi)^4}\int_{\mathbb{R}^4} e^{-ik\cdot x}\hat{A}^\mu(k)dk$ into $\partial_\mu A^\mu(x)=0$ yields $\frac{1}{(2\pi)^4}\int_{\mathbb{R}^4} e^{-ik\cdot x}(-ik_\mu)\hat{A}^\mu(k)dk = 0$, which, by completeness of the Fourier basis, holds iff $k_\mu\hat{A}^\mu(k)=0$.

(5) **e2.** Show that the Proca equation in Fourier space is $(-k^2+\dfrac{m^2c^2}{\hbar^2})\hat{A}^\nu(k)=0$, with $k^2=k\cdot k=\eta^{\mu\nu}k_\mu k_\nu$.

Substituting $A^\nu(x)=\frac{1}{(2\pi)^4}\int_{\mathbb{R}^4} e^{-ik\cdot x}\hat{A}^\nu(k)dk$ into the Proca equation yields $\frac{1}{(2\pi)^4}\int_{\mathbb{R}^4} e^{-ik\cdot x}(-k^2+\frac{m^2c^2}{\hbar^2})\hat{A}^\nu(k)dk=0$, which, by completeness of the Fourier basis, holds iff $(-k^2+\frac{m^2c^2}{\hbar^2})\hat{A}^\nu(k)=0$.

For nontrivial Fourier amplitudes $\hat{A}^\nu(k)$ we apparently have the *dispersion relation* $-k^2+\dfrac{m^2c^2}{\hbar^2}=0$.

($2\frac{1}{2}$) **f1.** Show that this is just the Einstein's mass-energy equivalence relation $E^2 = m^2c^4 + \|\vec{p}\|^2c^2$ for a moving particle with mass m and 3-momentum $\vec{p}$.

This follows by an elementary rewriting, using $k = p/\hbar$ and $p\cdot p = E^2/c^2 - \|\vec{p}\|^2$.

Given the dispersion relation, the Proca equation admits plane wave solutions in Minkowski spacetime of the form $A^\mu(x;k) = \epsilon^\mu(k)e^{-ik\cdot x}$ parameterized by $k\in\mathbb{R}^4$. Note that $k\cdot\boldsymbol{\epsilon}(k) = \eta_{\mu\nu}k^\mu\epsilon^\nu(k) \overset{\text{e1}}{=} 0$.

($2\frac{1}{2}$) **f2.** Show that there are precisely three independent "polarizations", i.e. independent components of the amplitude vector $\boldsymbol{\epsilon}(k) = \epsilon^\mu(k)\partial_\mu$ for each fixed $k\in\mathbb{R}^4$.

The divergence freeness condition for a plane wave is $k\cdot\boldsymbol{\epsilon} = \eta^{\mu\nu}k_\mu\epsilon_\nu = 0$, stating that the vectorial amplitude is perpendicular to the direction of 4-momentum relative to the Minkowski metric. This provides exactly one linear equation in four unknowns, leaving three components of $\boldsymbol{\epsilon}(k) = \epsilon^\mu(k)\partial_\mu$ undetermined.

Thus admissible solutions are linear combinations of three "polarization states", which we shall denote by $\boldsymbol{\epsilon}_\ell(k) = \epsilon^\mu_\ell(k)\partial_\mu$, $\ell = 1,2,3$. Note that ℓ is a polarization state label, not a tensor index.

($2\frac{1}{2}$) **g1.** Show that $\epsilon^0_\ell(k) = 0$ for all $\ell = 1,2,3$ if $\vec{k} = \vec{0}$.

For $\vec{k}=\vec{0}$ we have $0 = k\cdot\boldsymbol{\epsilon}_\ell(k) = k^0\epsilon^0_\ell(k)$, with (by virtue of the dispersion relation) $k^0 = \dfrac{mc}{\hbar} \neq 0$, whence $\epsilon^0_\ell(k) = 0$.

($2\frac{1}{2}$) **g2.** Show that, together with $\epsilon^0_\ell(k) = 0$, $\epsilon^i_\ell(k) = \delta^i_\ell$ for all $i,\ell = 1,2,3$ provides a desired set of three independent polarization states if $\vec{k} = \vec{0}$.

The dispersion relation is trivially satisfied by g1. The divergence-freeness constraint is likewise satisfied, since $k\cdot\boldsymbol{\epsilon}_\ell(k) = \eta_{\mu\nu}k^\mu\epsilon^\nu_\ell(k) \overset{*}{=} \eta_{00}k^0\epsilon^0_\ell(k) \overset{\star}{=} 0$, in which step $*$ uses $\vec{k}=\vec{0}$, and $\star$ again exploits g1.

(5) **h.** Show that, for general wave vectors $k\in\mathbb{R}^4$ (i.e. without the constraint $\vec{k}=\vec{0}$),

$$\sum_{\ell=1}^{3}\epsilon^\mu_\ell(k)\epsilon^\nu_\ell(k) = \eta^{\mu\nu} - \frac{\hbar^2}{m^2c^2}k^\mu k^\nu\,.$$

(Hint: (i) The only contravariant 2-tensor holors that can be formed in this context are linear combinations of $\eta^{\mu\nu}$ and $k^\mu k^\nu$. (ii) Recall g1 and g2.)

Stipulate an expression of the form $\sum_{\ell=1}^{3} \epsilon_\ell^\mu(k)\epsilon_\ell^\nu(k) = Ak^\mu k^\nu + B\eta^{\mu\nu}$ for some constants A and B. Insertion of $\vec{k} = \vec{0}$ and considering $\mu = \nu = 0$ yields $0 \overset{g1}{=} \sum_{\ell=1}^{3} \epsilon_\ell^0(k)\epsilon_\ell^0(k) = A(k^0)^2 + B\eta^{00} = A\frac{m^2c^2}{\hbar^2} + B$. For $\mu = \nu = i = 1, 2, 3$ we find likewise (no summation over i) $1 \overset{g2}{=} \sum_{\ell=1}^{3} \epsilon_\ell^i(k)\epsilon_\ell^i(k) = B\eta^{ii} = B$. As a consequence, $A = -\frac{\hbar^2}{m^2c^2}$, from which the result follows.

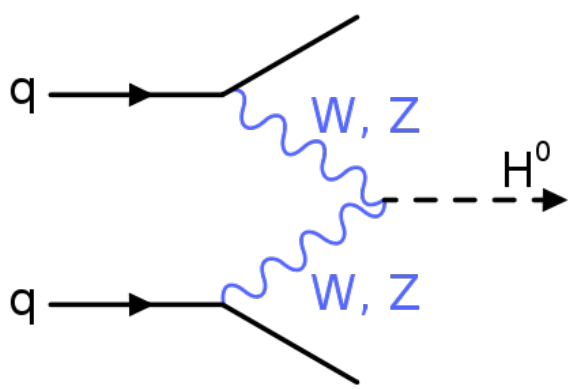

FEYNMAN DIAGRAM: PRODUCTION OF A HIGGS BOSON (H^0) FROM MASSIVE VECTOR BOSONS (W, Z) EMITTED BY QUARKS (q).

THE END